DISASSEMBLY

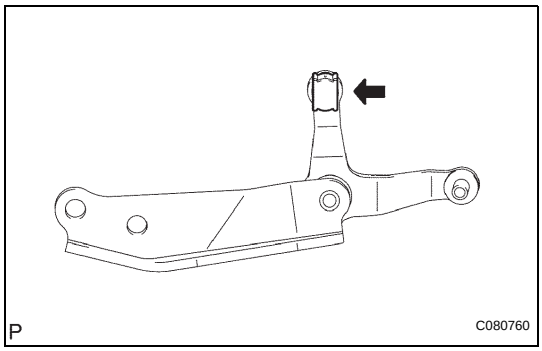

1. REMOVE CONTROL SHIFT LEVER BUSH

(a) Remove the control shift lever bush from the selecting bellcrank assembly.

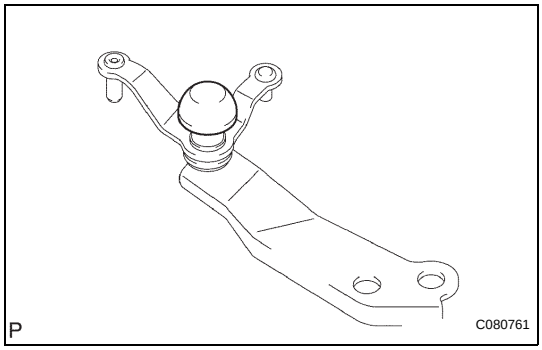

2. REMOVE SELECTING BELLCRANK DUST COVER NO. 1

(a) Remove the selecting bellcrank dust cover No. 1 from the selecting bellcrank assembly.

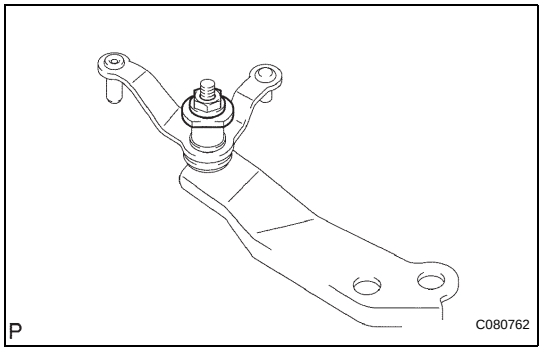

3. REMOVE SELECTING BELLCRANK NO. 2

(a) Remove the nut, spring washer and selecting bellcrank No. 2 plate washer.

(b) Remove the selecting bellcrank No. 2 from the selecting bellcrank support.

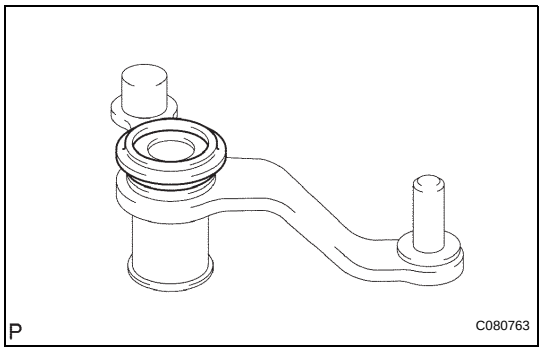

4. REMOVE SELECTING BELLCRANK DUST COVER NO. 2

(a) Remove the selecting bellcrank dust cover No. 2 from the selecting bellcrank No. 2.

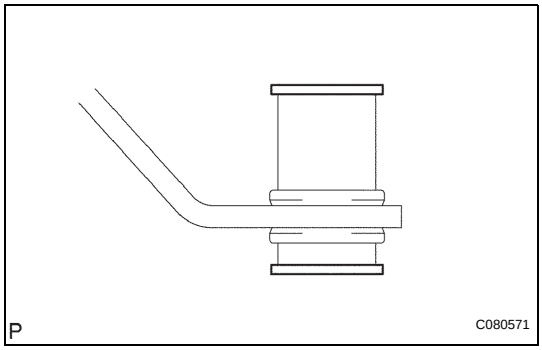

5. REMOVE SELECTING BELLCRANK NO. 2 BUSH

(a) Remove the 2 selecting bellcrank No. 2 bushes from the selecting bellcrank No. 2.

cardiagn.com

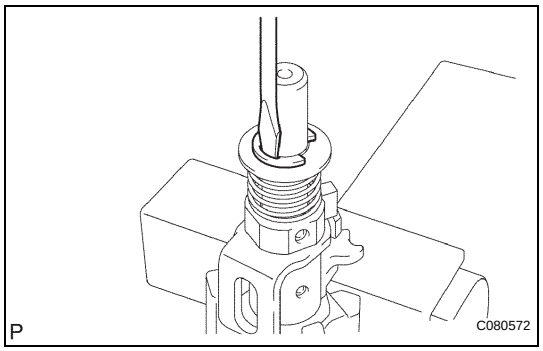

6. REMOVE SELECT SPRING SEAT NO. 2

(a) Using a screwdriver, remove the E-ring, select spring seat No. 2 and select return spring No. 2 from the shift and select lever shaft.

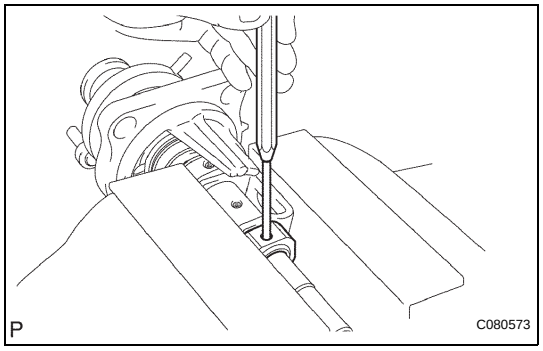

7. REMOVE SHIFT LEVER INNER NO. 2

(a) Using a pin punch (ϕ 5 mm) and a hammer, remove the slotted spring pin and shift lever inner No. 2 from the shift and select lever shaft.
HINT:
Make sure the orientation of the shift lever inner No. 2.

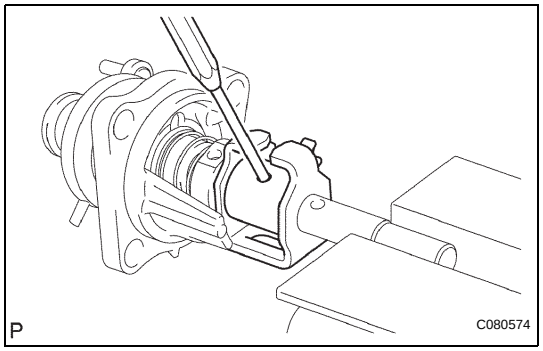

8. REMOVE SHIFT LEVER INNER NO. 1

(a) Using a pin punch (ϕ 5 mm) and a hammer, remove the slotted spring pin, shift lever inner No. 1 and shift inter lock plate from the shift and select lever shaft.
HINT:
Make sure the orientation of the shift lever inner No. 1.

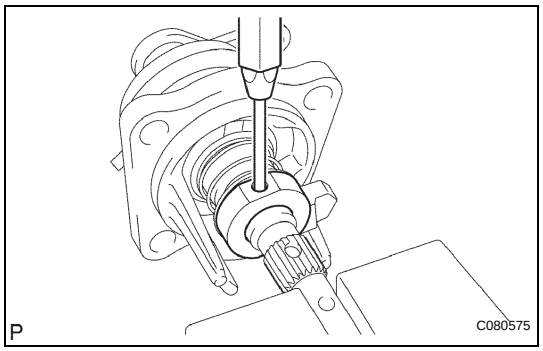

9. REMOVE SELECT INNER LEVER

(a) Using a pin punch (ϕ 5 mm) and a hammer, remove the slotted spring pin, select inner lever, select return spring No. 1 and select return spring seat No. 1.
HINT:
Make sure the orientation of the select inner lever.

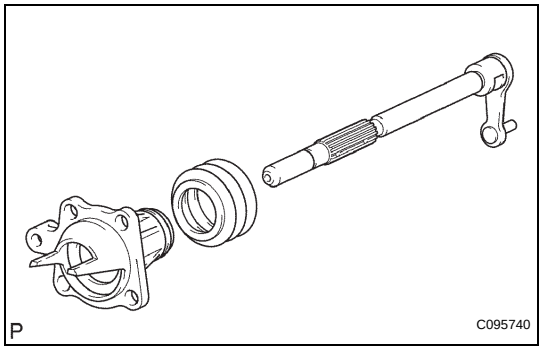

10. REMOVE CONTROL SHAFT COVER

(a) Using 2 screwdrivers and a hammer, tap out the snap ring.
HINT:
Use a shop rag to keep the snap ring from flying.

(b) Remove the control shaft cover and shift and select lever shaft dust boot.

cardiagn.com